QUAN.	STOCK #	DESCRIPTION	QUAN.	STOCK #	DESCRIPTION	QUAN.	STOCK #

SPECIFICATIONS & CONSTRUCTION INFORMATION

MODEL: SKDW-270-12 SKID TANK
DESCRIPTION: ABOVEGROUND, DOUBLE WALL STEEL STORAGE TANK
INNER TANK: 12 GAUGE
OUTER TANK: 12 GAUGE
OPENINGS: MINIMUM 3-2" FNPT COUPLINGS
1-3" FNPT COUPLINGS
1-3" FNPT FLANGE
CONSTRUCTION: WELDED USING UL-142 STANDARDS
FINISH: SURFACE PREP: SPCC SP-3
ONE SPRAY COAT OF RED PRIMER
FINISH ENAMEL COAT IS OPTIONAL

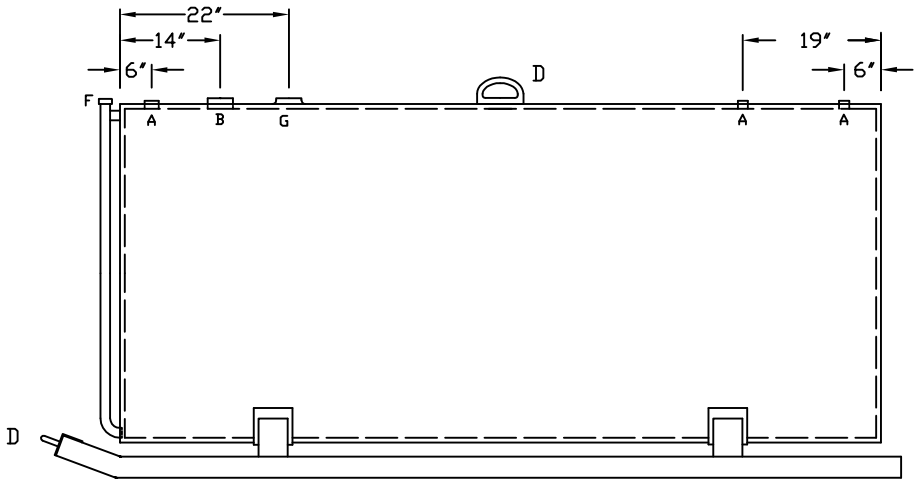

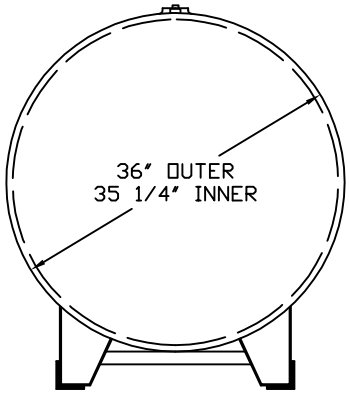

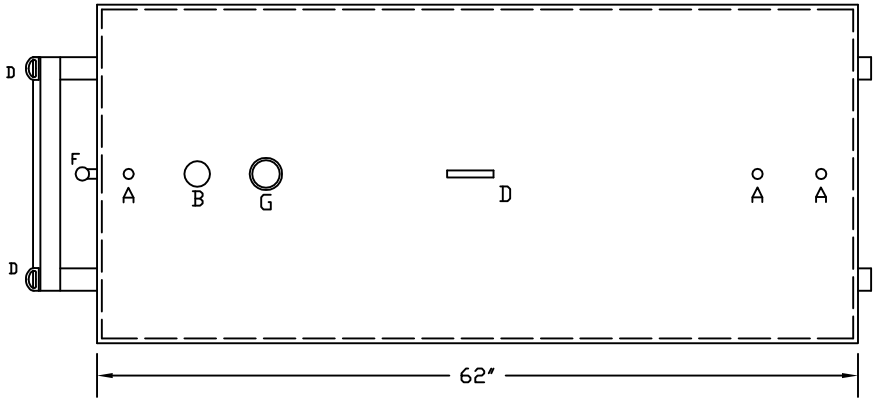

LEGEND

A - 2" FNPT COUPLING
B - 3" FNPT COUPLING
D - FORGED LIFT LUG
F - 2" SCH 40 PIPE W/ CAP, INTERSTICE INSPECTION
G - 3" FNPT FLANGE

GOLDSBORO, NC
1-919-734-8328

TURNER TANKS SKDW-270-12

DWG #: SKDW-270-12	SCALE: NONE	DATE: 02/25/05	REVISION:	APPROVED:	APPROVAL DATE: