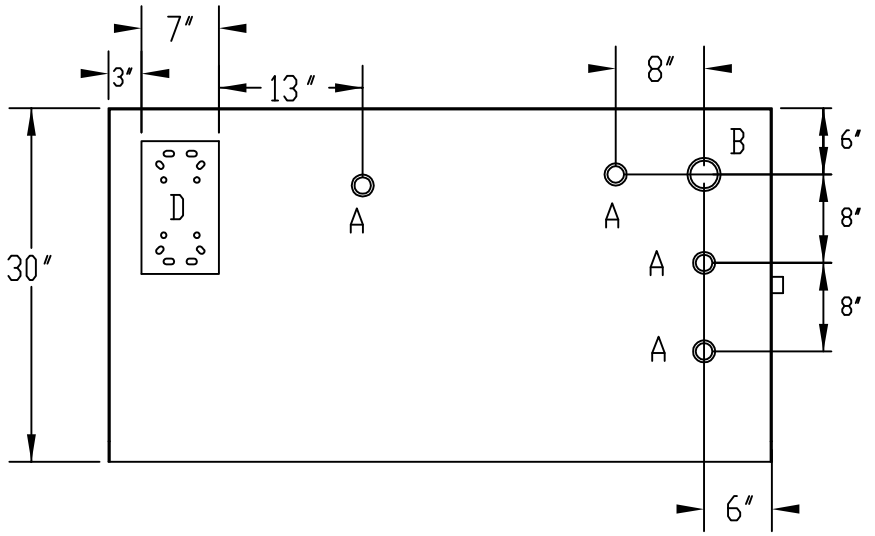

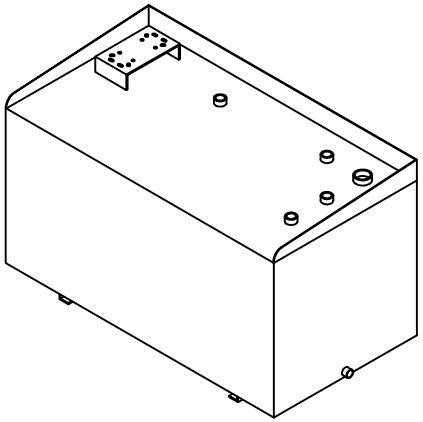

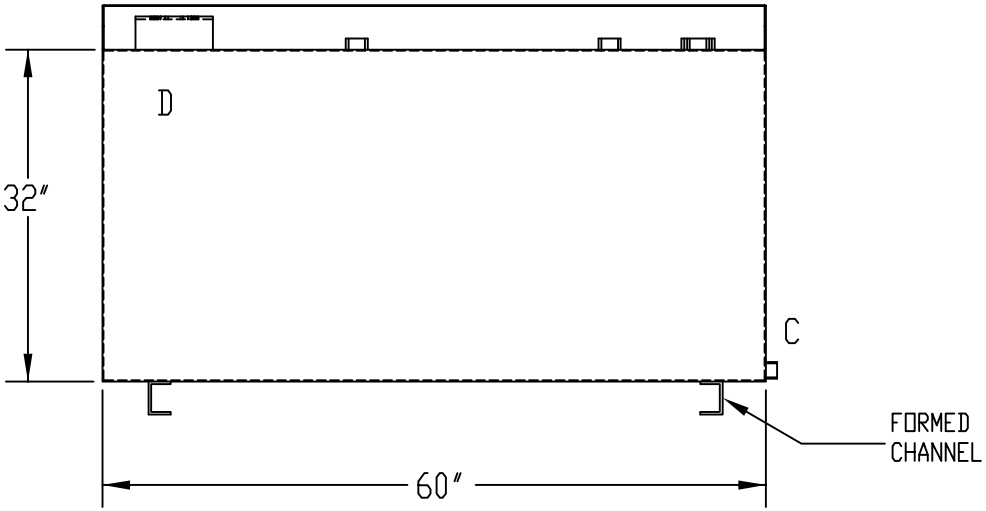

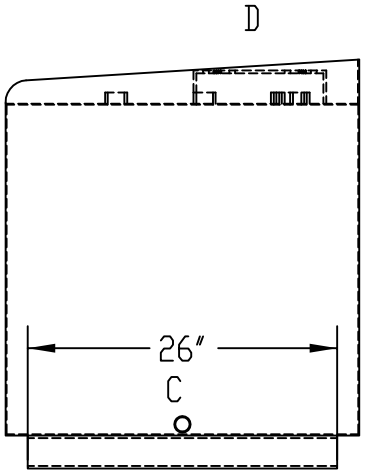

REF. TO: STANDARD TANK
DATE: 07/31/09
DWG BY: JR

TITLE: LB-250-12P

SCALE: 1:16

LEGEND: ID - (QTY. OF OPENINGS) PART
A - (4) 2″ FNPT FLANGE
B - (1) 3″ E.VENT FLANGE
C - (1) 1 ½″ FNPT FLANGE
D - (1) RMP

DESCRIPTION: ABOVE GROUND, SINGLE WALL 12 GA. STEEL STORAGE TANK

CAPACITY: 249 GALLONS

FINISH: SURFACE PREP: SPCC SP-3; ONE SPRAY COAT OF PRIMER; OPT FINISH

APPROX. WEIGHT: 321 lbs ± 5%

Underwriters Laboratories Inc.
LISTED ®

TURNER TANKS
1500 HWY 117 S.
GOLDSBORO, NC 27530
P: (919) 734 - 8328
F: (919) 736 - 4550

SIGNED APPROVAL: